A1

SURFACE ROUGHNESS	RATINGS ???	UNDER 0.8	UNDER 6.3	UNDER 25	UNDER 100	MAP-IN CHIMED SURFACE
		▽▽▽	▽▽	▽	▽	~

PREVIOUS DRAWING
U1-0E065/A

REVISIONS

NO.	UC NO.	DESCRIPTION	DATE	ZONE	APP-PROVED	CHECK-ED	DRAWN
A2	UC12336	A/Bを大形化した。	2019.11.19	C-4 F-2	木下	吉川	甘利

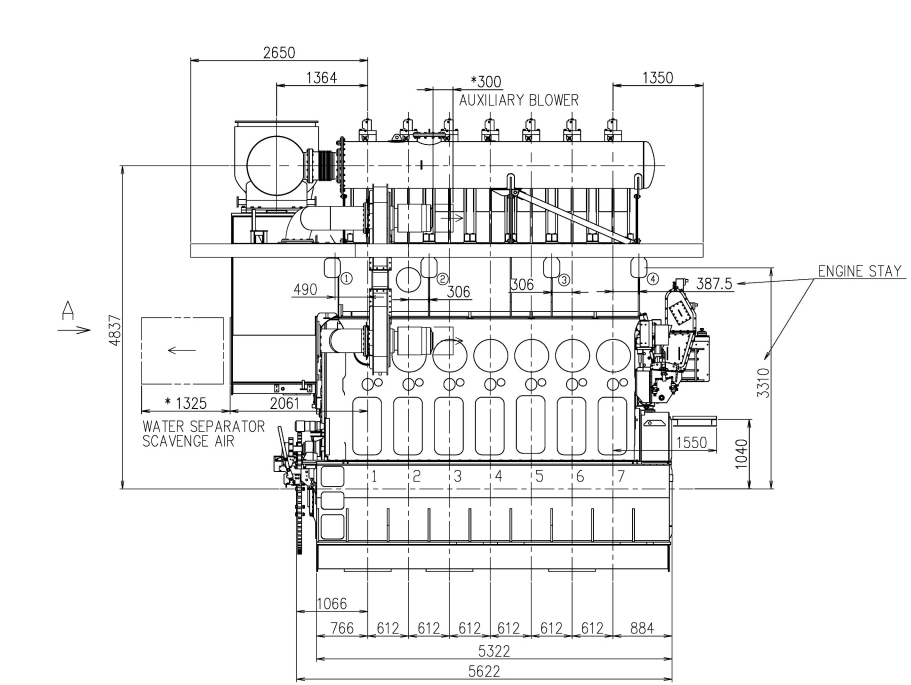

EXHAUST SIDE
排気側より見る

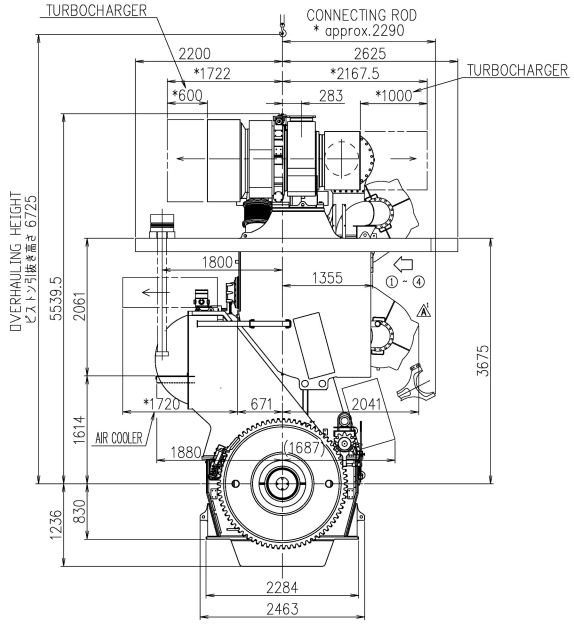

A
DRIVING END
出力軸端より見る

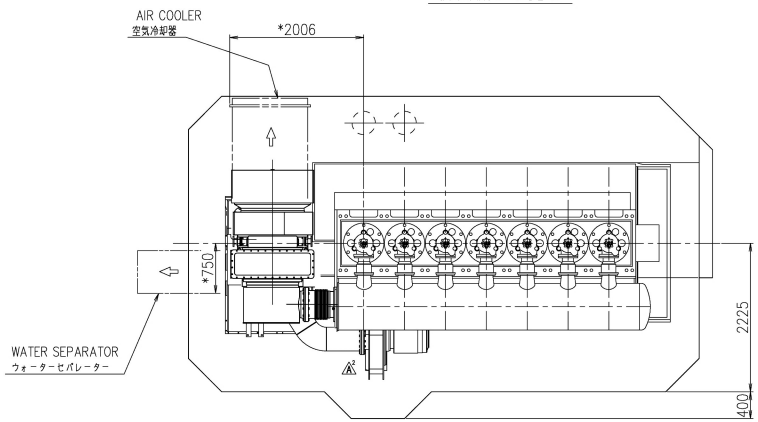

PLAN
平面図

⇦ :防振ステー配置可能位置
⇦ :POSITION OF ENGINE STAY

ENGINE STAY TYPE		①	②	③	④	TOTAL	DRAWING NO.
FRICTION	CASE1	○	○	○	○	4	U2-1E077
	CASE2	○			○	2	U2-1E001

*SPACE FOR REMOVAL
開放スペース

PART NO.	MARK	DESCRIPTION	MATERIALS	TEST P.	1-PIECE WEIGHT (kg)	TOTAL QUANTITY PER SET
	1	ENGINE OUTLINE VIEW 機関全体外形図				

開発部		7UEC35LSE-B2/C1	
APPROVED 江戸 吉川	APPROVED	ENGINE OUTLINE VIEW (ME148MB×1)	
CHECKED 岡村	CHECKED	機関全体外形図 (MET48MB×1)	1/1
DRAWN Charita	DRAWN		00-00
1st ANGLE PROJECTION	DATE DRAWN 2019-04-17	DRAWING NO. U1-0E074	REV.NO. A
	SCALE 1:40		

出図先 品証 調達 組立 機械 生計 控 計

COMMON VARIATION OF TOLERANCE (MACHINING) (M.M)	RATINGS OF NOMINAL DIMENSION	OVER 0.5 TO 6	OVER 6 TO 30	OVER 30 TO 120	OVER 120 TO 400	OVER 400 TO 1000	OVER 1000TO 2000	OVER 2000TO 4000	OVER 4000TO 8000	OVER 8000TO 16000
	TOLERANCE	± 0.1	± 0.2	± 0.3	± 0.5	± 0.8	± 1.2	± 2.0	± 2.0	± 2.5

THIS DRAWING IS THE PROPERTY OF JAPAN ENGINE CORPORATION. AND SHALL NOT BE REPRODUCED, NOT BE USED TO FURNISH ANY INFORMATION FOR MAKING DRAWINGS OR APPARATUS EXCEPT FOR THE CASE WHERE JAPAN ENGINE CORPORATION AGREES WITH WRITTEN MATERIALS.

Weld shall comply with JIS (Japan Industrial Standards).
Material shall comply with JIS unless otherwise specified.

JAPAN ENGINE CORPORATION