A1

SURFACE ROUGHNESS	RATINGS	UNDER 0.8	UNDER 6.3	UNDER 25	UNDER 100	ANY OTHER GRIND SURFACE
	1a1					

PREVIOUS DRAWING
U6-62188

REVISIONS

NO.	UC NO.	DESCRIPTION	DATE	ZONE	APP-PROVED	CHECK-ED	DRAWN
B		図面フォーム変更。 内容は変更なし。	2018-06-15	全面	青田	木下 吉川	
C	UC12029	全面見直した。	2019-03-15	全面	江戸	木下 吉川	甘利

備考
1.敷板は4.5mmを基準とする。

REMARKS
1.PLATE THICKNESS OF PLATFORM THICKNESS 4.5mm

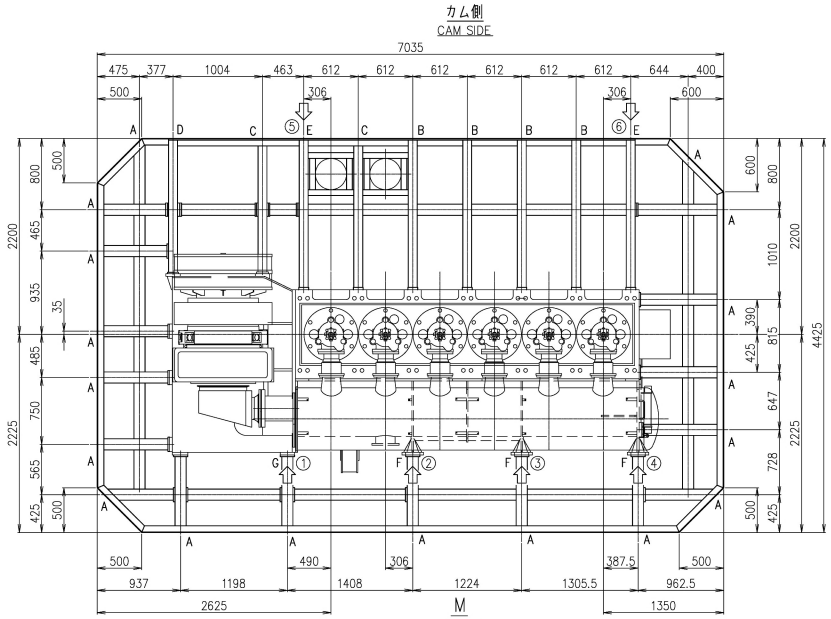

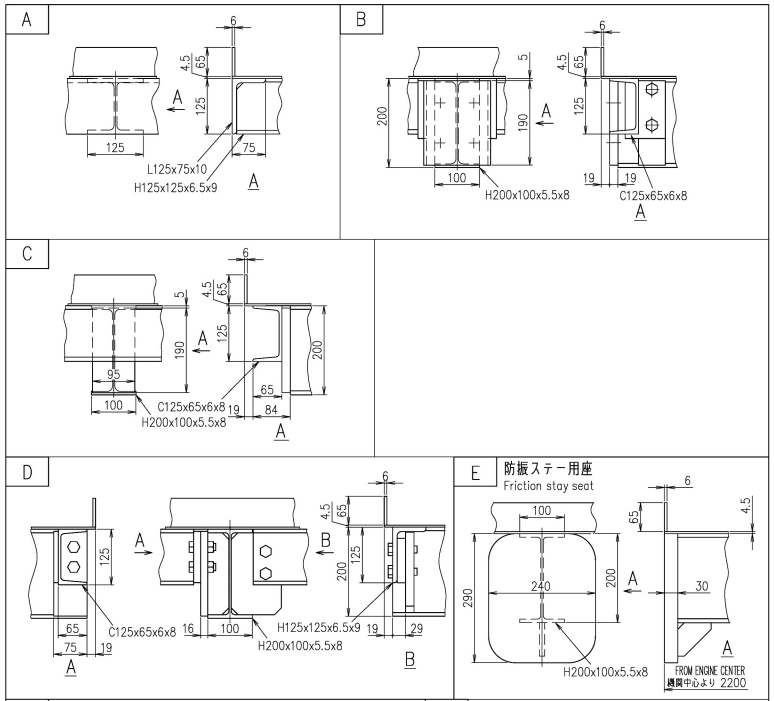

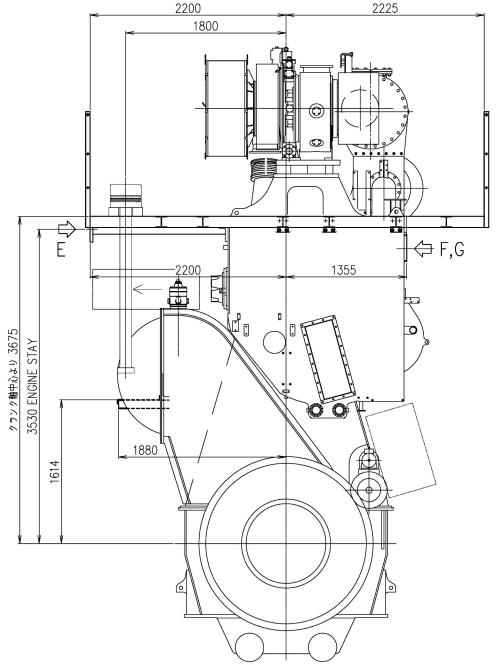

出力軸側より見る
VIEW FROM DRIVING END SIDE

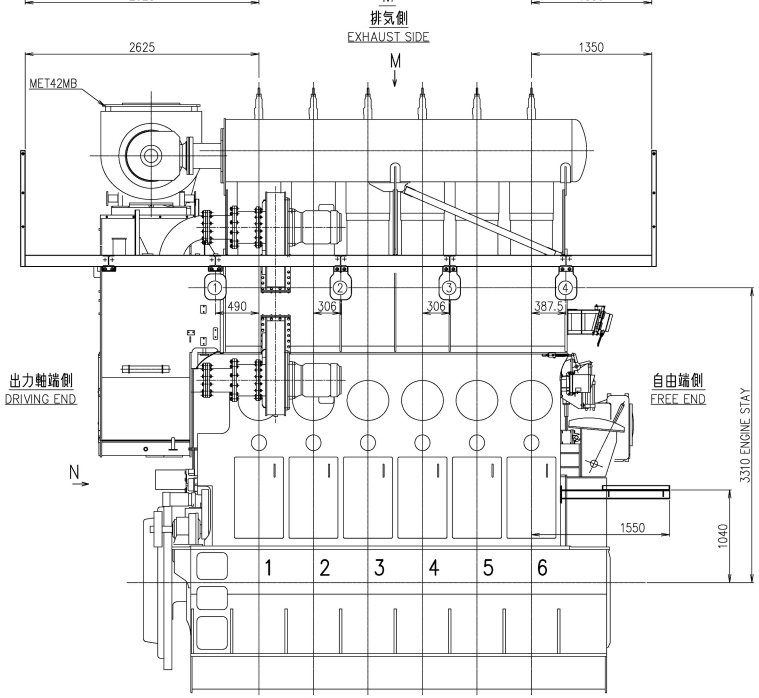

排気側より見る
VIEW FROM EXHAUST SIDE

⇦ Position of engine stay attachment points.
：防振ステー配置可能位置

田中	石井												
COMMON VARI-ATION OF TOLERANCE (MACHINING) (M.M)	RATINGS OF NOMINAL DIMENSION	OVER 0.5 TO 6	OVER 6 TO 30	OVER 30 TO 120	OVER 120 TO 400	OVER 400 TO 1000	OVER 1000TO 2000	OVER 2000TO 4000	OVER 4000TO 8000	OVER 8000TO 16000			
	TOLERANCE	±0.1	±0.2	±0.3	±0.5	±0.8	±1.2	±2.0	±2.0	±2.5			

THIS DRAWING IS THE PROPERTY OF JAPAN ENGINE CORPORATION AND SHALL NOT BE REPRODUCED, NOT BE USED TO FURNISH ANY INFORMATION FOR MAKING DRAWINGS OR APPARATUS EXCEPT FOR THE CASE WHERE JAPAN ENGINE CORPORATION AGREES WITH WRITTEN MATERIALS.

	1	PLATFORM ARRANGEMENT 格子配置図					
PART NO.	MARK	DESCRIPTION	MATERIALS	TEST P.	1-PIECE WEIGHT (kg)	TOTAL WEIGHT (kg)	QUANTITY PER SET

開発部
APPROVED 杉原 江戸
APPROVED
CHECKED 今中、中川
CHECKED
DRAWN
DRAWN

6UEC35LSE-B2/C1
PLATFORM ARRANGEMENT
(MET42MB×1)
格子配置図
(MET42MB×1)
1/1
64-01

1st ANGLE PROJECTION
DATE DRAWN 2012-06-28
SCALE 1/30.1/6
DRAWING NO. U6-6E001
REV.NO. C

Weld shall comply with JIS (Japan Industrial Standards).
Material shall comply with JIS unless otherwise specified.

JAPAN ENGINE CORPORATION

出図先 品証 調達 組立 機械 生計 経計