A1

Tier3

SURFACE ROUGHNESS	RATINGS (μ)	UNDER 0.8	UNDER 6.3	UNDER 25	UNDER 100	JAP-AN CHNED SURFACE
	▽▽▽▽	▽▽▽	▽▽	▽	~	

PREVIOUS DRAWING U1-OK073

REVISIONS

NO.	UC NO.	DESCRIPTION	(DATE)	ZONE	APP-ROVED	CHECK-ED	DRAWN
A3	UC14113	空気導管サポート追加。	2022.10.21		飯塚	吉川	甘利

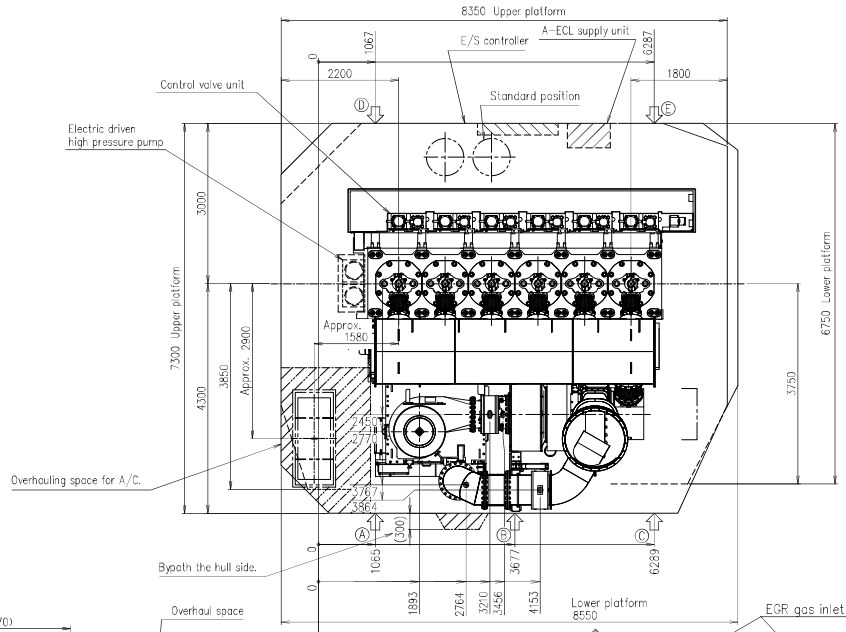

Plan
平面図

Position of engine stay attachment points.
：防振ステー配置可能位置

Engine stay type		A	B	C	D	E	TOTAL
Friction	CASE1	○	○	○			3
Friction	CASE2	○		○	○	○	4
Hydraulic	CASE3	○		○	○	○	4

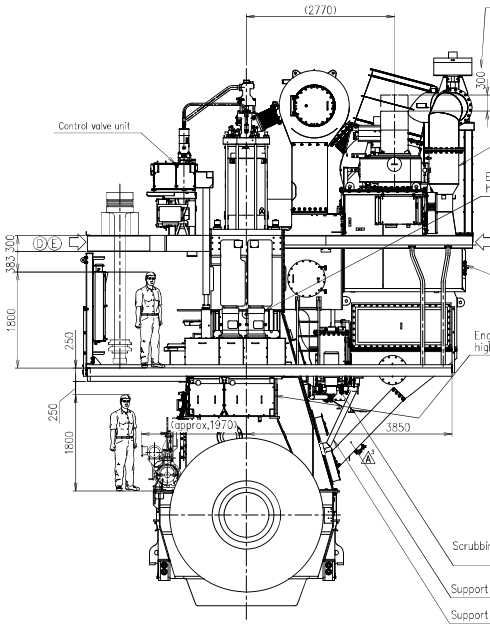

DRIVING END
出力軸端より見る

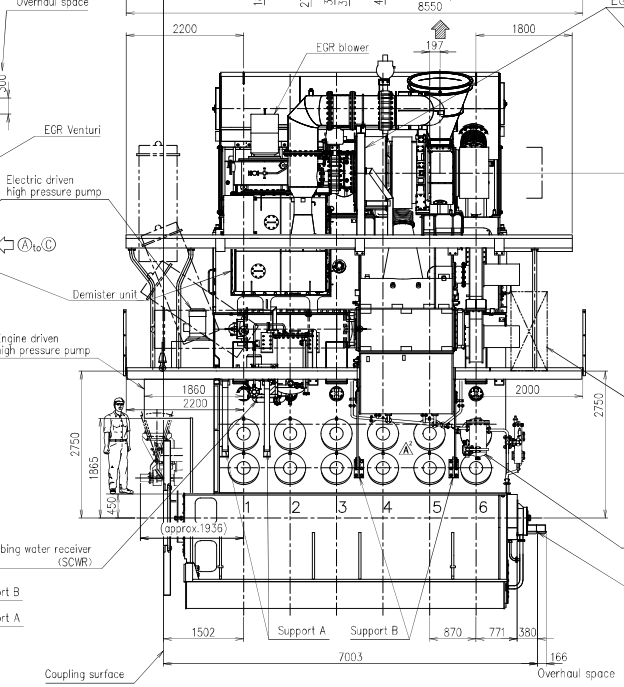

EXHAUST SIDE
排気側より見る

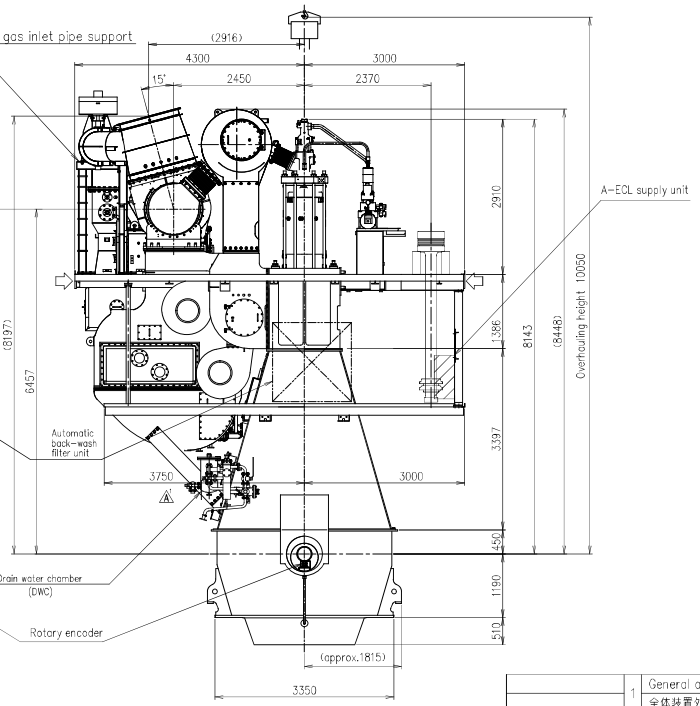

FREE END
自由端より見る

◆印寸法はEGRブロワ吊位置を示す。(1.5ton用)
Dimensions indicated with ◆ show the lifting position of EGR blower. (for 1.5ton)

●印寸法はEGRガス出入口管組立用の吊位置を示す。(0.5ton用)
Dimensions indicated with ● show lifting position of EGR gas inlet / outlet pipes. (for 0.5ton)

COMMON VARI-ATION OF TOLERANCE (MACHINING) (M.M)	RATINGS OF NOMINAL DIMENSION	OVER 0.5 TO 6	OVER 6 TO 30	OVER 30 TO 120	OVER 120 TO 400	OVER 400 TO 1000	OVER 1000TO 2000	OVER 2000TO 4000	OVER 4000TO 8000	OVER 8000TO 16000
	TOLERANCE	±0.1	±0.2	±0.3	±0.5	±0.8	±1.2	±2.0	±2.0	±2.5

THIS DRAWING IS THE PROPERTY OF JAPAN ENGINE CORPORATION AND SHALL NOT BE REPRODUCED, NOT BE USED TO FURNISH ANY INFORMATION FOR MAKING DRAWINGS OR APPARATUS EXCEPT FOR THE CASE WHERE JAPAN ENGINE CORPORATION AGREES WITH WRITTEN MATERIALS.

PART NO.	MARK	DESCRIPTION	MATERIALS	TEST P.	1-PIECE WEIGHT (kg)	TOTAL WEIGHT (kg)	QUANTITY PER SET
	1	General arrangement 全体装置外形図					1

開発部

APPROVED 江戸 / 飯塚 — APPROVED

CHECKED 吉川 — CHECKED

DRAWN 甘利 — DRAWN

6UEC50LSH-Eco-C3-EGR
General Arrangement (Outline)
全体装置外形図 (MET53MB×1)

1/1 — 00-00

1st ANGLE PROJECTION

DATE DRAWN 2022.6.28

SCALE 1/50

DRAWING NO. U1-OK092

REVNO. A

品証 / 開発 / 組立 / 機械 / 生計

CSFC A1 A3

JAPAN ENGINE CORPORATION